USER MANUAL

PSHIELD MAX

CREATED BY	
Luxpower	Version: LXP-PSHIELDMAX-001E02

Copyright© 2026 Lux Power Technology Co., Ltd. All Rights Reserved. This manual, protected by the copyright and intellectual property rights of Lux Power Technology. No part of this document may be modified, copied, or reproduced without prior written permission.

All brands and trademarks mentioned belong to their respective owners.

Please read carefully carefully to understand product reliability and warranty eligibility. For detailed warranty information, refer to the Lux Power Technology Co., Ltd Warranty. This manual is intended for professional service providers. Nothing in this document constitutes an express or implied warranty.

Descriptions may include forward-looking statements. Actual conditions may differ. This document is provided for reference only and is subject to change without notice by Lux Power Technology Co., Ltd.

Website

YouTube

Facebook

www.luxpowertek.com

PSHIELD MAX

Scan to download

Table Of Contents

Statement of Law 1

Safety Precautions 2

Preface 3

1. Introduction 3

1.1 Brief Introduction 3

1.2 Product Properties 3

1.3 Product identity definition 4

2. Product Specification 5

2.1 Size and Weight 5

2.2 Performance Parameter 5

2.3 Interface Definition 6

2.3.1 DIP switch definition and description 7

2.3.2 Communication port and cable pinout definition 7

2.3.3 LED indication 8

2.4 Battery Management System(BMS) 9

2.4.1 Voltage Protection 9

2.4.2 Current Protection 9

2.4.3 Temperature Protection 9

2.4.4 Other Protection 10

3. Installation and Configuration 10

3.1 Preparation for installation 10

3.1.1 Environmental requirements 10

3.1.2 Tools and data 11

3.1.3 Technical preparation 11

3.1.4 Unpacking inspection 11

3.1.5 Engineering coordination 13

3.2 Equipment installation 13
3.2.1 Electrical installation 16
3.2.2 Battery parameter settings on the inverter 18
4. Operation and Maintenance 18
4.1 Battery system usage and operation instructions 18
4.2 Alarm description and processing 19
4.3 Analysis and treatment of common faults 19

Revision History

Revision NO.	Revision Data	Revision Reason
1.0	2025.07.22	First Released
1.1	2026.02.02	Add wheels install and comm cable connection way

Statement of Law

Copyright of this document belongs to Lux Power Technology Co., Ltd.

No part of this documentation maybe excerpted, reproduced, translated, annotated or duplicated in any form or by any means without the prior written permission of Lux Power Technology Co., Ltd. All Rights Reserved.

This product complies with the design requirements of environmental protection and personal safety. The storage, use and disposal of the products shall be carried out in accordance with the product manual, relevant contract or relevant laws and regulations.

Customer can check the related information on the website of Lux Power Technology Co., Ltd. when the product or technology is updated.

Web URL: www.luxpowertek.com

Please note that the product can be modified without prior notice.

Safety Precautions

Warning

- Please do not put the battery into water or fire, in case of explosion or any other situation that might endanger your life.
- Please connect wires properly while install, do not reverse connect.
- Please check the positive and negative connection with meter before powering on the battery, to avoid short circuit.
- Please avoid damaging the battery, especially stab, hit, trample or strike.
- Please turn off the battery and cut off all power completely when you remove the device or reconnect power cables, otherwise it could cause the danger of electric shock.
- In case of fire, please use a dry powder fire extinguisher to extinguish the fire. Liquid fire extinguishers may explode.
- For your safety, please do not disassemble any parts at will under any circumstances. Maintenance must be carried out by authorized technicians or our company's technical support personnel. Equipment failure caused by unauthorized operation is not covered by the warranty.

⚠ CAUTION

- Our products have been strictly inspected before shipment. Please contact us if you find any abnormal phenomena such as unable to turn on.
- Please ground the product correctly before use to ensure your safety.
- In order for the product to be used correctly, please ensure that the relevant equipment is compatible and matched, and the parameters are set correctly.
- **Please do not mix batteries from different manufacturers, different types and models, as well as old and new.**
- The environment and storage method may affect the life of the product, please follow the user manual to ensure the normal operation of the device.
- For long-term storage, the battery should be recharged once every 6 months, to make SOC get to 50%.
- Please recharge the battery in 24 hours after it is fully discharged or over-discharge protection is activated.
- Formula of theoretical standby time: T=C/I (T is standby time(h), C is battery capacity(Ah), I is total current on the battery(A)).
- This device complies with part 15 of the FCC Rules. Operation is subject to the following twoconditions:
  (1) This device may not cause harmful interference, and
  (2) this device must accept any interference received, including interference that may cause undesired operation.
- NOTE: This equipment has been tested and found to comply with the limits for a Class A digital device, pursuant to part 15 of the FCC Rules. These limits are designed to provide reasonable protection against harmful interference when the equipment is operated in a commercial environment. This equipment generates, uses, and can radiate radio frequency energy and, if not installed and used in accordance with the instruction manual, may cause harmful interference to radio communications. Operation of this equipment in a residential area islikely to cause harmful interference in which case the user will be required to correct the interference at his own expense.

Preface

Manual declaration

PSHIELD MAX Li-ion(LFP) battery energy storage system can provide energy to users through parallel combination. And it can not be used in series.

This user manual details the basic structure, parameters, basic procedures and methods of installation and operation and maintenance of the equipment.

1. Introduction

1.1 Brief Introduction

PSHIELD MAX battery system is a standard 16.076kwh battery unit, customers can choose a certain number of PSHIELD MAX according to your needs, parallel them to create a larger capacity battery pack. This product is especially suitable for energy storage applications with high operating temperatures, limited installation space, long power backup time and long service life.

1.2 Product Properties

PSHIELD MAX energy storage battery's positive electrode material is lithium iron phosphate, battery cells are managed effectively by BMS with better performance, the system's features as below:

- Comply with European ROHS, Certified SGS, employ non-toxic, non-pollution environment-friendly battery.
- Positive material is lithium iron phosphate (LiFePO4), safer with longer life span.
- Carries battery management system with better performance, possesses protection function like over-discharge, over-charge, over-current, abnormal temperature.
- Self-management on charging and discharging, balancing function.
- Flexible remote upgrade and remote monitor.
- Flexible configurations allow parallel of multi battery for longer standby time.
- Self-ventilation with lower system noise.
- Short circuit and reverse connection protection.
- Less battery self-discharge, then recharging period can be up to 10 months during the storage.
- No memory effect so that battery can be charged and discharged shallowly.
- The working environment temperature range is wide, -20℃~+55℃, and the cycle performance is good at high temperature.
- Support 0.5C charge and discharge.

1.3 Product identity definition

	Battery voltage is higher than safe voltage, direct contact with electric shock hazard.
	Caution fire.
	Flammable and Explosive.
	The scrapped battery cannot be put into the garbage can and must be professionally recycled.
	Read the user manual before using.
	If catch fire, do not put out with water.
	Do not place near open flame or incinerate.
	Keep away from children.
	After the battery life is terminated, the battery can continue to be used after it recycled by the professional recycling organization and do not discard it at will.
	This battery product meets European directive requirements.

⚠ DANGER

Do not disconnect,disassemble or repair by yourself
Do not drop,deform,impact,cut or spearing with a sharp object
Do not place near open flame or incinerate
Do not sit or put heavy things on battery
Keep away from moisture or liquid
Keep out of reach of children,animals or insects
Contact the supplier within 24 hours if anything wrong

Ne pas débrancher, démonter ou réparer soi-même
Ne pas laisser tomber, déformer, percer ou percer avec un objet pointu
Ne pas placer à proximité d'une flamme nue ou incinérer
Ne pas s'asseoir ou poser des objets lourds sur la batterie
Tenir à l'abri de l'humidité ou des liquides
Tenir hors de portée des enfants, des animaux ou des insectes
Contacter le fournisseur dans les 24 heures en cas de problème

LUXPOWERTEK

Model:	PSHIELD MAX
Name:	LFP Li-ion Battery
Rated Voltage /Capacity/System Energy:	51.2V/314Ah/16.076kWh
Max.Charge Voltage:	57.2V
Recommend Cut off Voltage:	49V
Max.Charge Current:	160A
Max.Discharge Current:	200A
Recommend Discharge Current:	160A
Short Circuit Current:	1312A
Short Circuit Time:	868us
Degree of protection:IP65	
IEC Code:IFpP72/175/208/[16S]M/-20+50/90	
Date of manufacture:	
Series Number:	

Shenzhen Lux Power Technology Co.,Ltd

2. Product Specification

2.1 Size and Weight

Table 2-1 PSHIELD MAX Device size

Product	Nominal Voltage	Nominal Capacity	Max.Dimension	Weight
PSHIELD MAX	DC51.2V	314Ah	900×475×235mm	≈119kg

2.2 Performance Parameter

Table 2-2 PSHIELD MAX performance parameter

Item	Parameter value
Rated Voltage(V)	51.2
Work Voltage Range(V)	45.6~57.6
Rated Capacity(Ah)	314
Rated Energy(kWh)	16.076
Recommend Charge/Discharge Current(A)	160/160
Max. continuous Charge/Discharge Current(A)	160/200
Peak Charge Current(A)①	180 (15s)
Peak Charge Current(A)②	200 (500ms)
Peak Discharge Current(A)③	210 (120s)
Peak Discharge Current(A)④	220 (500ms)
Charge Voltage(Vdc)	57.2

①②: When it is “180A≤charge current < 200A”, the BMS will start the over-charge current protection and cut off charge after 15s, when it is “charge current ≥ 200A”, BMS will start protection and cut off charge after 500ms.
③④: When it is “210A≤discharge current < 220A”, the BMS will start the over-discharge current protection and cut off discharge after 120s, when it is “discharge current≥220A”, BMS will start protection and cut off discharge after 500ms.

2.3 Interface Definition

This section elaborates the interface functions of the front interface of the device.

Figure 2-1 The sketch of interface.

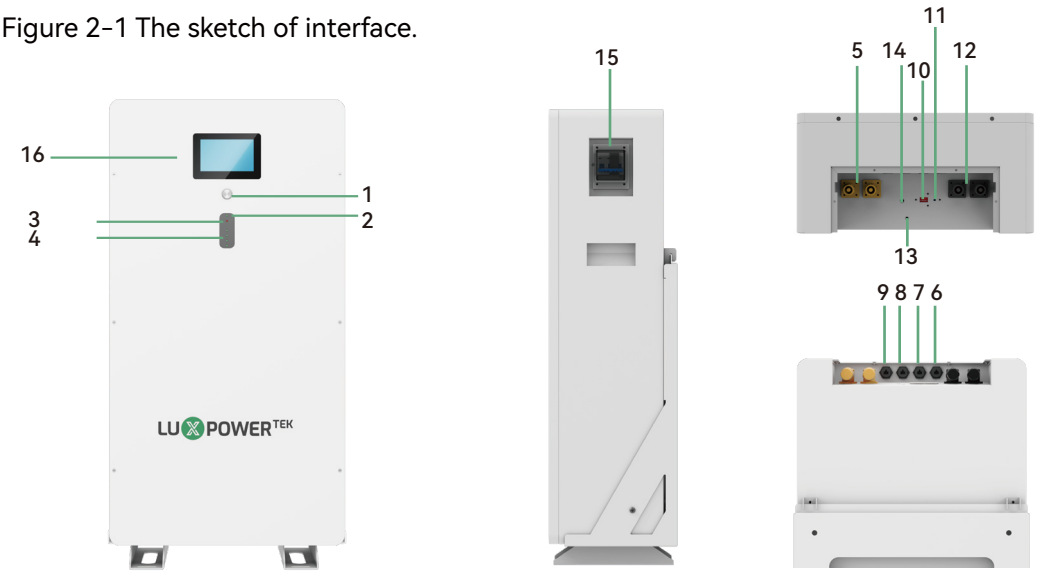

Table 2-3 Interface Definition

Item	Name	Definition
1	SW button	You need to press down it to wake up BMS. And press back it to sleep BMS.
2	RUN LED	Follow the table “LED indicates instructions”.
3	ALM LED	Follow the table “LED indicates instructions”.
4	SOC LED	Follow the table “LED indicates instructions”.
5	Positive connector	BAT+ for output and parallel.
6	485 Port	For the RS485 protocol communication
7	CAN port	For the CAN protocol communication
8	COM IN	For communication between batteries.
9	COM OUT	For communication between batteries.
10	DIP Switch	Setup for some special protocol.
11	RESET button	Press it about 3s to wake up battery when it is in force sleep state. Or Press more than 6s to remove short circuit protection state.
12	Negative connector	BAT- for output and parallel.
13	Grounding	Shell ground connection.
14	Relief Valve	Prevent the internal air pressure of the chassis from being too high.
15	DC Breaker	Turn on it before starting, to make the battery output.
16	LCD	Touched LCD, for reading the battery info.

2.3.1 DIP switch definition and description

Table 2-4 Interface Definition

DIP switch position					
1	2	3	4	5	6
Most of the time keep them 000000 for both primary and subordinate. **Only need to dial for some special protocols.**					

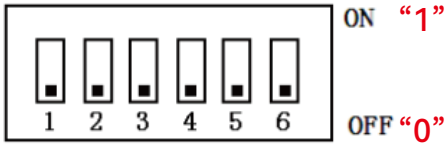

2.3.2 Communication port and cable pinout definition

Figure 2-2 CAN, RS485, OUT, IN interface definition

Table 2-4 Pin Definition(CAN Port)

Foot position	Definition
PIN1	NC
PIN2	NC
PIN3	SGND
PIN4	CAN H
PIN5	CAN L
PIN6	SGND
PIN7	NC
PIN8	NC

Table 2-5 Pin Definition(485 Port)

Foot position	Definition
PIN1	RS485B
PIN2	RS485A
PIN3	SGND
PIN4	CAN H
PIN5	CAN L
PIN6	SGND
PIN7	RS485A
PIN8	RS485B

Tips: Please pay attention of the inverter COM port PIN definition to make cable.

Table 2-6 Pin Definition(IN&OUT Port)

Foot position(IN)	Definition	Foot position(OUT)	Definition
PIN1	DI-RS485B	PIN1	DO-RS485B
PIN2	DI-RS485A	PIN2	DO-RS485A
PIN3	SGND	PIN3	SGND
PIN4	CAN H	PIN4	CAN H
PIN5	CAN L	PIN5	CAN L
PIN6	SGND	PIN6	SGND
PIN7	RS485A1	PIN7	RS485A
PIN8	RS485B1	PIN8	RS485B

Tips: Between batteries from OUT to IN it is always standard straight comm cable.

2.3.3 LED indication

Table 2-6 LED status indicators

	Status	RUN	ALARM	SOC1	SOC2	SOC3	SOC4
Charge	Normal	Flash1	OFF	According to SOC, every led indicates 25% SOC (Flash2)			
	Alarm (high temp, high current etc.)	Flash1	Flash3				
	Over-charge Protect	Flash1	OFF	ON	ON	ON	ON
	Other failure protection	Flash1	ON	According to SOC, every led indicates 25% SOC			
	Over-current protection	Flash1	ON	According to SOC, every led indicates 25% SOC (with buzzer beeping)			
	Charge MOS failure	OFF	Flash4	ON	ON	ON	ON
Discharge	Normal	ON	OFF	According to SOC, every led indicates 25% SOC			
	Alarm (over-temp, low voltage, high current, low SOC etc.)	ON	Flash3				
	Low-voltage protection (beeping)	OFF	ON	OFF	OFF	OFF	OFF
	Other failure protection	Flash1	ON	According to SOC, every led indicates 25% SOC			
	Short circuit&reverse connection protect	OFF	ON	OFF	OFF	OFF	OFF
	Over-discharge current protection	OFF	ON	According to SOC, every led indicates 25% SOC (with-buzzer beeping)			
	Discharge MOS failure	OFF	Flash4	OFF	OFF	OFF	OFF
Standby	Normal	Flash3	OFF	According to SOC, every led indicates 25% SOC			
	Alarm	Flash3	Flash3				
Shut down		OFF	OFF	OFF	OFF	OFF	OFF

Flash1: on 0.25s, off 3.75s Flash2: on 0.5s, off 0.5s
Flash3: on 1.5s, off 1.5s Flash4: on 0.25s, off 0.25s

Note: The buzzer sound alarm setting can be manually turned off on the monitor software, and the factory default is on.

2.4 Battery Management System(BMS)

2.4.1 Voltage Protection

Low Voltage Protection:

When battery Min. cell voltage or total voltage is lower than the rated protection value, the over discharge protection will be activated, and the buzzer on BMS will make an alarm sound. Then battery system will cut off output. When there is charge current and the voltage increase to rated value, the protection is off.

Over Voltage Protection in Charging:

Battery will start protection and stop charging when total voltage or Max. cell voltage reaches the rated protection value during charge. When total voltage and Max. cell decrease to rated value, the protection is off.

2.4.2 Current Protection

Charge Limit Current function:

When 165A≤ charge current < 180A, BMS will limit the charge current to 10A automatically.
BMS retest every 10min, and discharge/full charge/no-charge 2.5min /restart SW can release immediately .
If this function is not activated when charge current≥180A, BMS will start the over-charge current protection and cut off charge after 15s.

Over-charge Current Protection:

When it is “180A≤charge current < 200A”, the BMS will start the over-charge current protection and cut off charge after 15s, when it is “charge current≥200A”, BMS will start protection and cut off charge after 500ms.

After protection, restore in 1min delay or you can restart SW.

Over-discharge Current Protection:

When it is “210A≤discharge current < 220A”, the BMS will start the over-discharge current protection and cut off discharge after 120s, when it is “discharge current≥220A”, BMS will start protection and cut off discharge after 500ms.

After protection, restore in 3min delay or immediately when there is charge current. Or restart SW button.

2.4.3 Temperature Protection

Low/High temperature protection during charge:

When cell’s temperature is beyond range of 0℃~+55℃ during charge, temperature protection is activated, BMS will stop charging.

The protection is off when temperature goes back to rated work range.

Low/High temperature protection during discharge:

When cell's temperature is beyond range of -20 ℃ ~+55 ℃ during discharge, temperature protection is activated, BMS will stop discharging.

The protection is off when temperature goes back to rated work range.

2.4.4 Other Protection

Short Circuit Protection:

Each time when short circuit appears, BMS will be locked and shows red light solid on, then you need to check the power cables connection, and long press RESET key more than 6s to remove.

Reverse Connect Protection:

Yes, generally it can protect BMS in reverse connection, but you should avoid reverse connection to prevent irreversible damage to the BMS in extreme cases.

⚠ CAUTION

- The discharge current that load needs should be lower than the battery's Max. discharge current.

3. Installation and Configuration

3.1 Preparation for installation

Safety Requirement

This system can only be installed by personnel who have been trained in the power supply system and have sufficient knowledge of the power system.

The safety regulations and local safety regulations listed below should always be followed during the installation.

- All circuits connected to this power system with an external voltage of less than 51.2V must meet the SELV requirements defined in the IEC60950 standard.
- If operate within the power system cabinet, make sure the power system is not charged. Battery devices should also be switched off.
- Distribution cable wiring should be reasonable and has the protective measures to avoid touching these cables while operating power equipment.
- When install the battery system, installer must wear the protective items below:

The isolation gloves

Safety goggles

Safety shoes

Figure3-1

3.1.1 Environmental requirements

Discharge temperature: -20℃ ~ +55℃

Charge temperature: 0℃~+55℃

Storage temperature: -10℃~ +35℃

Relative humidity: 5% ~ 85%RH

Elevation: no more than 4000m

Operate environment: Indoor installation, avoid the sun, no conductive dust and corrosive gas.

And the following conditions are met:

- Installation location should be away from the sea to avoid brine and high humidity environment.
- The ground for product arrangement shall be flat and level.
- No flammable explosive materials near the installation site.
- The optimal ambient temperature is 15℃~30℃.
- Keep away from dust and messy zones.

3.1.2 Tools and data

Tools and meters that may be used are shown in table 3-1.

Table 3-1 Tool instrument

Name	
Screwdriver	Multimeter
Cable tie	Insulation tape

⚠ CAUTION

- DC breaker or fuse is necessary between battery and inverter,you must prepare one in advance,and also it must be bigger enough to meet the Max.current.

3.1.3 Technical preparation

Electrical interface check

- Confirm the DC breaker between battery and inverter is big enough.
- Confirm the battery interface on the inverter is good and no short circuit.
- Confirm the battery capacity is enough to supply power to the load when the inverter is running at full power.

The security check

- Firefighting equipment should be provided near the product, such as portable dry powder fire extinguisher.
- Automatic fire fighting system shall be provided for the case where necessary.
- No flammable, explosive and other dangerous materials are placed beside the battery.

3.1.4 Unpacking inspection

- After the equipment arrives at the installation site, it should be loaded and unloaded according to the regulations to prevent the sun and rain.
- Before unpacking, the total number of packages should be indicated on the invoice attached to each package, and the box should be checked to see if it is in good condition.
- During the unpacking process, handle with care to protect the surface coating of the item.
- When opening the package, the installer should read the technical documents, checklist, and ensure that the items are complete and intact according to the configuration sheet and packing list. If there is any damage to the inner package, it should be checked and recorded in detail.

Packing list

Battery-PSHIELD MAX
51.2V/314Ah ×1

User Manual ×1

Warranty card ×1

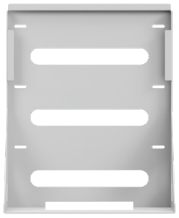

Bracket1
Wall-mounted ×1

Bracket2 or Wheels
Ground Foot ×2
or Wheels ×4

Bracket3
Wall-hook ×2

Power cable positive
Orange/50mm²/
L1500mm ×1

Power cable negative
Black/50mm²/L1500mm
×1

Cable grommet ×3

RJ45 Waterproof
connector
Male end ×4

Standard comm cable
Black/L1500mm ×1

Ground cable
L500mm, 4mm² ×1

Expansion bolt
M8*80 ×6

Screw1 (When Feet)
Countersunk
M6*14 ×4

Screw2
Combination screws,
M6*14 ×6

Screw1 & Nut
(When wheels)
Countersunk, M8*12 ×16
Flange locknut M8 ×16

FCC
DECLARATION OF
CONFORMITY

3.1.5 Engineering coordination

The following items should be noted before construction:

- Power line specification
  The power line specification shall meet the requirements of maximum discharge current for each product.
- Mounting space and bearing capacity
  Make sure that the battery has enough room to install, and that the brackets have enough load capacity.
- Wiring
  Make sure the power line and ground wire are reasonable. Not easy to short-circuit, water and corrosion.

3.2 Equipment installation

Table 3-2 Installation steps

Step 1	Fix the wall-mounted bracket and the base bracket in place or hang them on the wall, then hang the battery, indication is as below figure 3-2.
Step 2	Confirm that the SW button on the front panel is off state.
Step 3	Connect the comm cable between batteries correctly.
Step 4	Confirm the DC breaker of batteries are off.
Step 5	Connect power cables between battery and busbar,between busbar and inverter's battery interface correctly, confirm no reverse connection and no short circuit.
Step 6	Connect comms cable between the primary battery CAN and inverter BMS port.
Step 7	1. Turn on all the DC breaker of batteries firstly.
	2. Press the SW button to wake up batteries.
	3. Check the battery system output voltage and led status.
Step 8	Setup inverter to make it communicate to the battery .

Figure 3-2

Product Size:

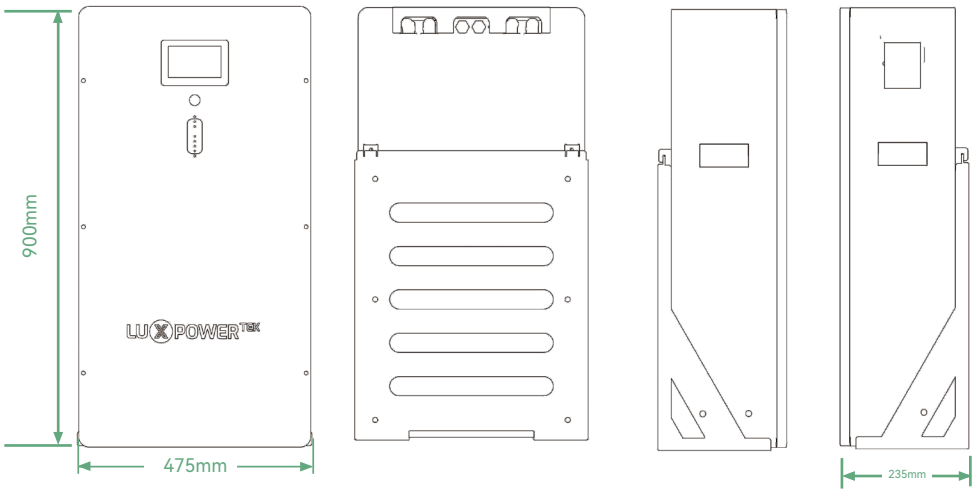

Accessories:(Optional)

Cables:

Bracket1:

Bracket2:

Bracket3:

Bolt:

Screw1:

Screw2:

Wheel

Nut

Install on the ground

1. Connect the Bracket2 to Bracket1 firstly, use 4*Screw1 to fix

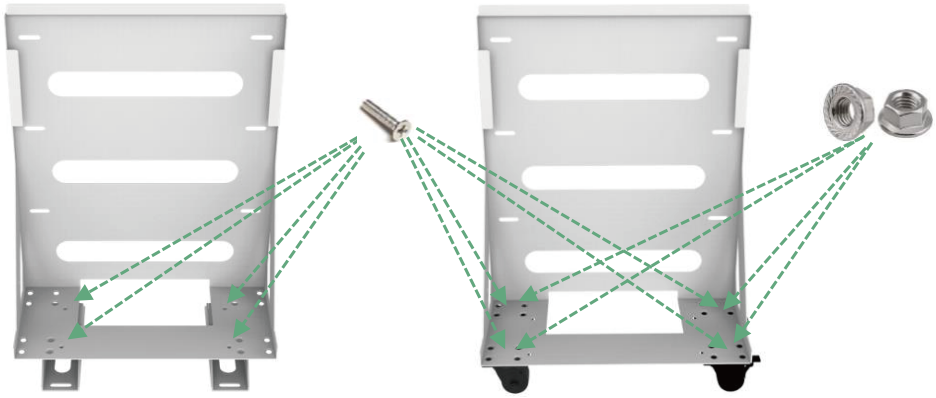

2. Place the bracket1 against the wall and mark the coordinates of the 6 holes. Drill holes for the M10*80 bolts, and then bolt the Bracket1 to the wall .

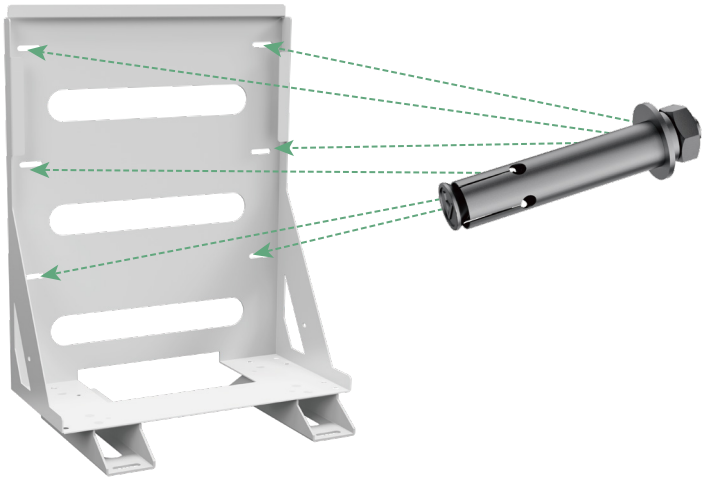

3. Fix the Bracket3 on the back of battery with 4*Screw2, hook is face down.

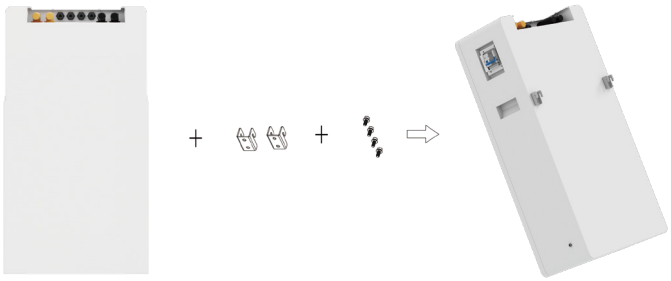

4. Hang the battery on the stand.

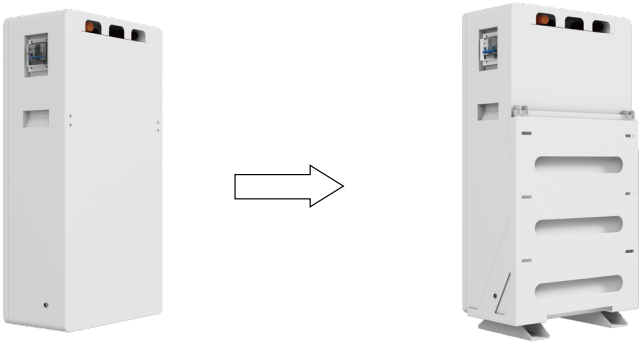

5. Connect the Screw2 on the sides of Bracket1 to fix it with Battery, you can also connect ground cable on the one side.

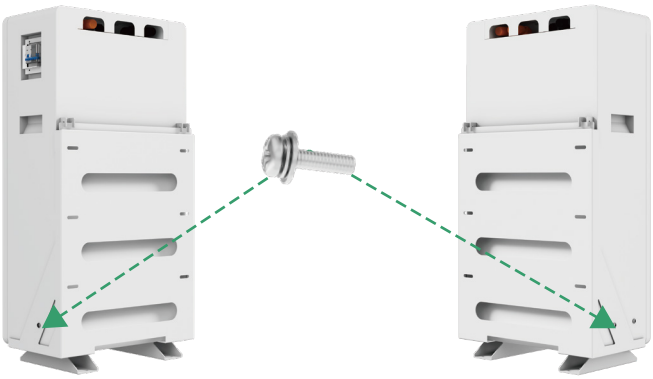

Install on the wall

1. Drill holes in the wall according to the spacing dimensions of the wall-mounted bracket holes, and fix the bracket to the wall with expansion bolts.

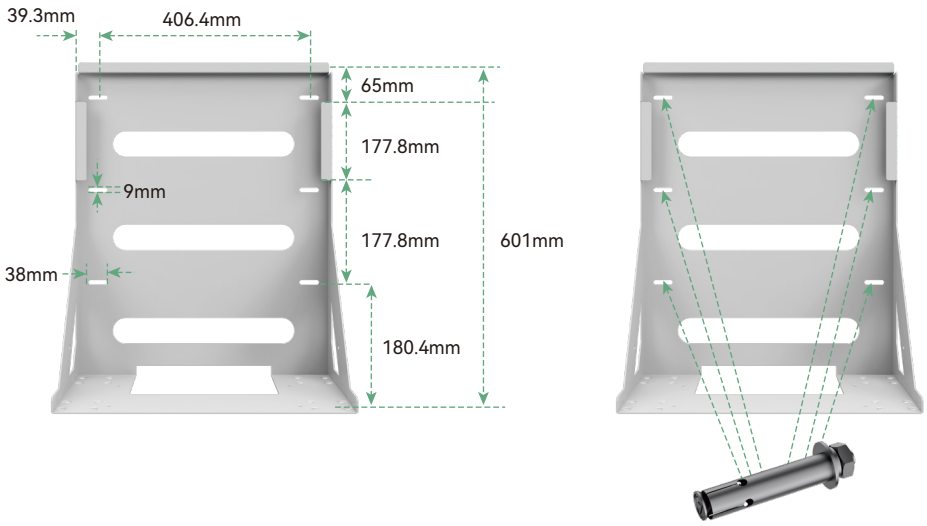

2. Fix the Bracket3 on the back of battery with 4*Screw2, hook is face down.

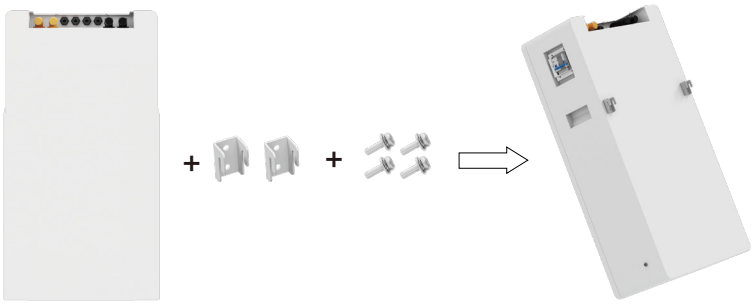

3. Lift the module onto the bracket. The hook clamps the top of the bracket, and screws are used to fix the battery and the bracket together at the bottom of both sides.

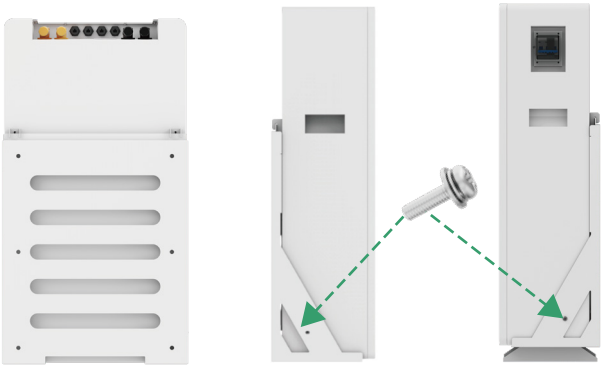

3.2.1 Electrical installation

Before connecting the power cables, use multimeter to measure cable continuity, short circuit, confirm positive and negative, and accurately mark the cable labels.

Measuring methods:

- Power cable check: select the buzzer mode of multimeter and detect the both ends of the same color cable. If the buzzer calls, it means the cable is in good condition.
- Short circuit judgment: choose multimeter resistor file, probe the same end of positive and negative pole, if the resistor shows infinity, means that the cable is available.
- After visual testing of power line connection, the positive and negative poles of the battery shall be connected respectively to the positive and negative poles of the opposite terminal.

It is necessary to add a DC breaker between the inverter and the battery system. But if you want you can add a bigger total breaker. The selection of the DC breaker requires:

Voltage: U>60V

$$\text{Current: } I = \frac{\text{Inverter power}}{45V}$$

The **DC breaker is necessary** to be installed between the battery module and the inverter, as shown in Figure 3-3:

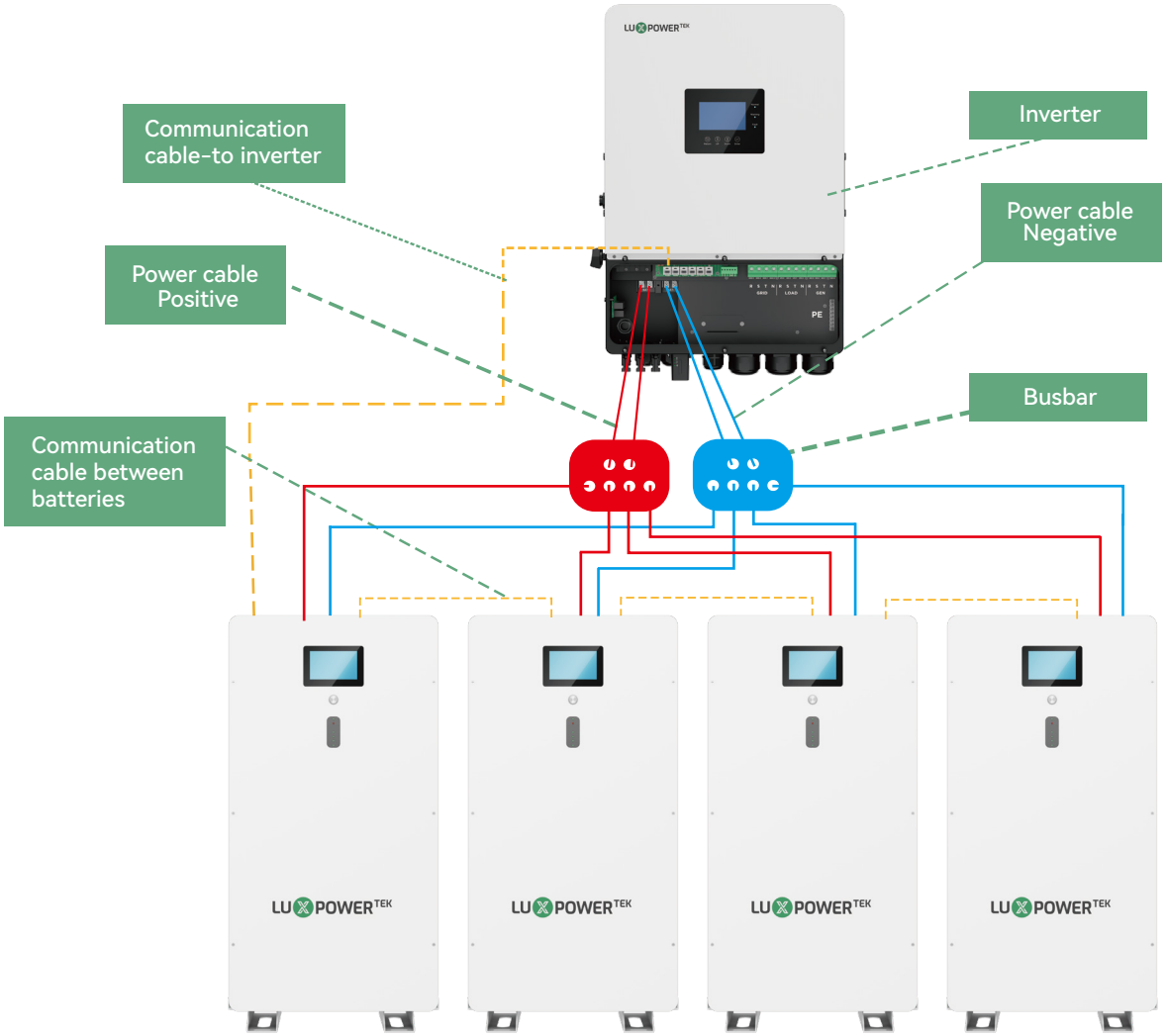

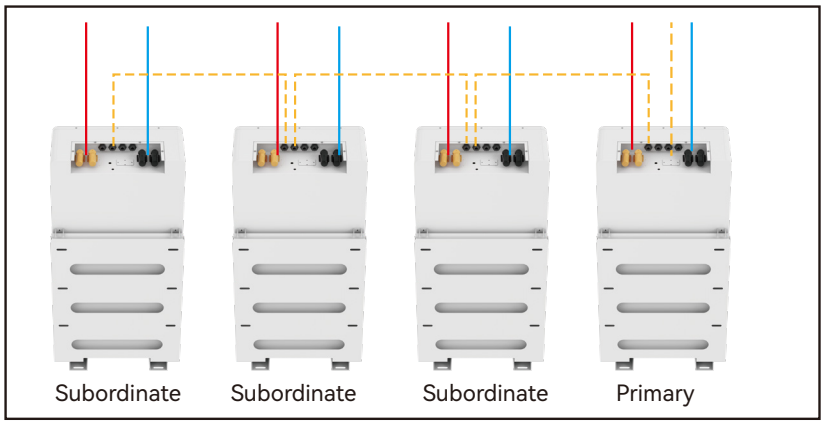

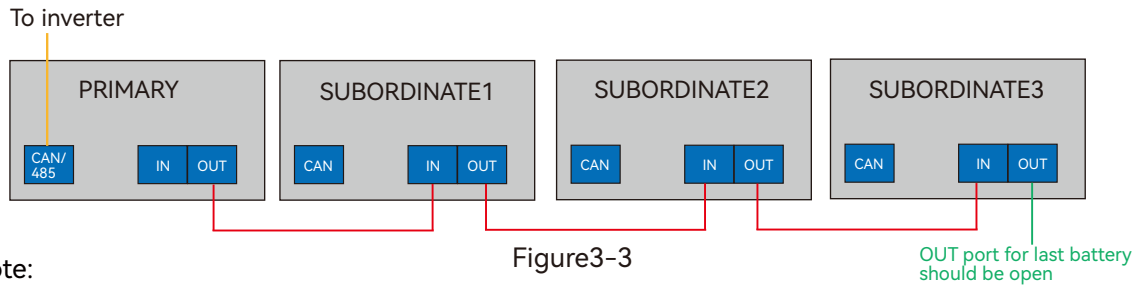

Figure3-3

Note:

1. Each pair of power cable, its limited continuous current is 200A, if the inverter Max. work current is more than 200A, please add power cables according to the proportion.
2. After power cables connection is OK, you'd better turn on the breaker firstly before turning on the batteries' SW button, then the pre-charge function is effective.

3.2.2 Battery parameter settings on the inverter

Max. Charging (Bulk) Voltage: 57.2V
Absorption Voltage: 55V
Float Voltage: 54V
Recommend Shut Down (cut off) Voltage: 49~50V
Recommend Shut Down (cut off) SOC: 20%
Recommend Restart Voltage: 52V
Recommend Max. Charge and discharge Current: 160A*battery QTY

4. Operation and Maintenance

4.1 Battery system usage and operation instructions

After completing the electrical installation, follow these steps to start the battery system.

1. Please connect comm cable between batteries, it's from **last OUT to next IN**.
2. After the indicator self-test, the RUN indicator will light and the SOC indicator will be on according to actual SOC.
3. If you want to turn off the battery, please stop the charge or discharge firstly, then turn off the SW button.

Figure4-1

⚠ CAUTION

- After waking up the battery, if the ALM light is flashing or on, please refer to the "4.2 Alarm description and processing". If the failure cannot be eliminated, please contact the dealer timely.
- Use a voltmeter to measure whether the voltage of the circuit breaker battery access terminal is higher than 45.6V, and check whether the voltage polarity is consistent with the inverter input polarity. If the circuit breaker battery input terminal has a voltage output and is greater than 45.6V, then the battery begun to work normally.
- After confirming that the battery output voltage and polarity are correct, turn on the DC breaker.
- Check if the indicator of the inverter and battery connection (communication indicator and battery access status indicator) is normal. If it is normal, successfully complete the connection between the battery and the inverter. If the indicator light is abnormal, please refer to the inverter manual for the cause or contact the dealer.

4.2 Alarm description and processing

When protection mode is activated or system failure occurred, the alarm signal will be given through the working status indicator on the front panel of the PSHIELD MAX.

If the fault such as single cell over voltage, charging over-current, under-voltage protection, high-temp protection and other abnormalities which affects the output, please deal with it according to Table 4-1.

Table 4-1 Main alarm and Protection

Statue	Alarm category	Alarm indication	Processing
Charge state	Over-current	RED Buzzer start	Stop charging and find out the cause of the trouble
	High temp	RED	Stop charging
Discharge state	Over-current	RED Buzzer start	Stop discharging and find out the cause of the trouble
	High temp	RED	Stop discharging and find out the cause of the trouble
	Low voltage Protection	RED Buzzer start	Start charging

4.3 Analysis and treatment of common faults

Analysis and treatment of common faults in the Table 4-2:

Table 4-2 Analysis and treatment of common faults

No.	Fault phenomenon	Reason analysis	Solution
1	The indicator does not respond after the power on	Total voltage lower than 35V, or force sleep.	Check the total voltage,or long press RESET 3~5s.
2	No DC output	Battery status is abnormal. Battery gets into some protection states.	Read the battery information on the monitor.
3	The DC power supply time is too short	SOC is not accurate. Battery capacity become smaller.	Fully charge the battery to calibrate SOC. Replace new or add more modules.
4	The battery can't be fully charged to 100%	Charging voltage is too low.	Adjust charging voltage at 57.2V.
5	The power cable sparks once power on and ALM light RED	Power connection short-circuit.	Turn off the battery, check the cause of the short circuit.
6	Communication fault	Battery type on the inverter is wrong/ Communication cable pinout is incorrect/The communication cable is incorrectly connected on the battery communication port or the inverter communication port	Check these possible causes one by one.

If you need any technical help or have any question, please contact the dealer in time.

YOUR RELIABLE ENERGY SOLUTION PARTNER

luxpowertek

Lux Power Technology Co., Ltd
Headquarter: +86 755 8520 9056
www.luxpowertek.com
Contact us: info@luxpowertek.com